7. Turbocharger

A: REMOVAL

1. EXCEPT FOR STI MODEL

1) Set the vehicle on a lift.
2) Disconnect the ground cable from the battery.

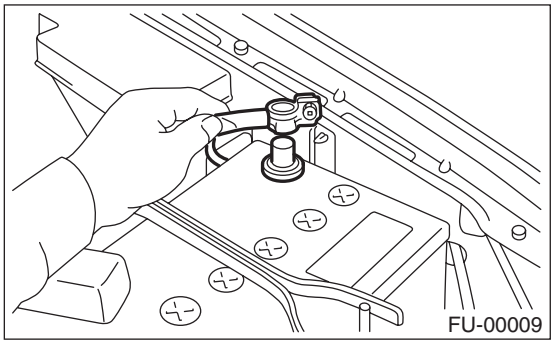

3) Remove the center exhaust pipe.
<Ref. to EX(H4DOTC)-10, REMOVAL, Center Exhaust Pipe.>
4) Lower the vehicle.
5) Separate the turbocharger joint pipe from turbocharger.

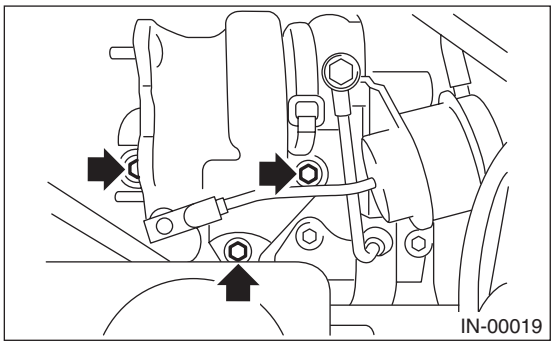

6) Disconnect the engine coolant hose which is connected to coolant filler tank.

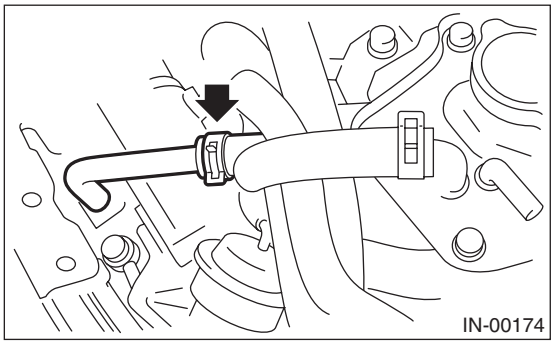

7) Loosen the clamp which secures turbocharger to intake duct.

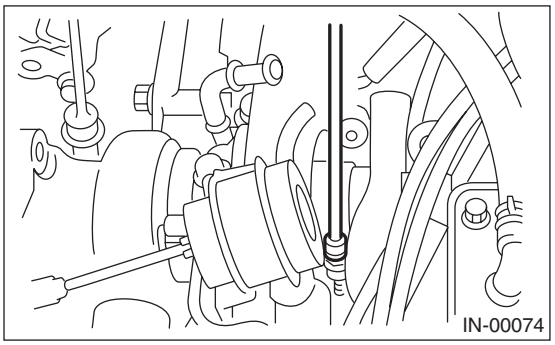

8) Remove the bolts which secure oil inlet pipe bracket to turbocharger.
9) Disconnect the engine coolant hose from the pipe, and remove the turbocharger bracket RH.

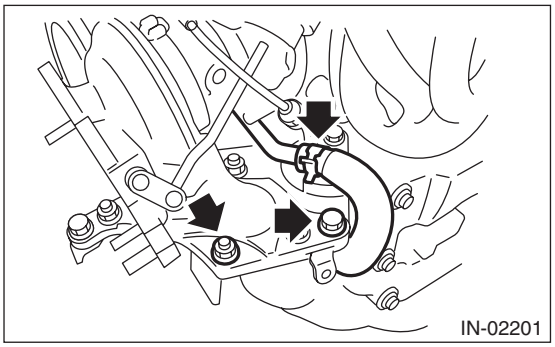

10) Remove the oil inlet pipe from turbocharger.

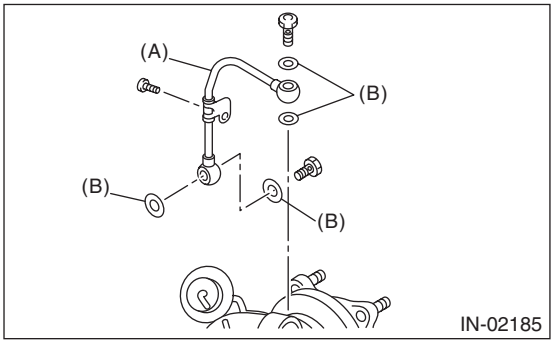

(A) Oil inlet pipe
(B) Metal gasket

11) Disconnect the oil outlet hose from pipe.

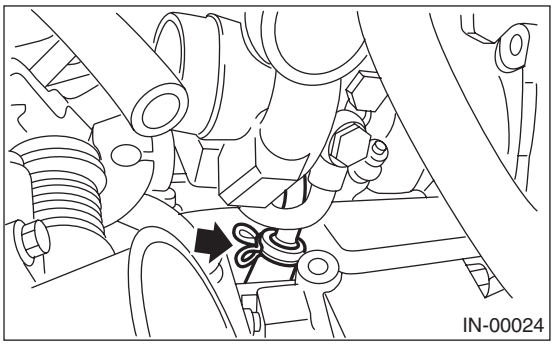

12) Take out the turbocharger from engine compartment.

2. STI MODEL

1) Set the vehicle on a lift.
2) Disconnect the ground cable from the battery.

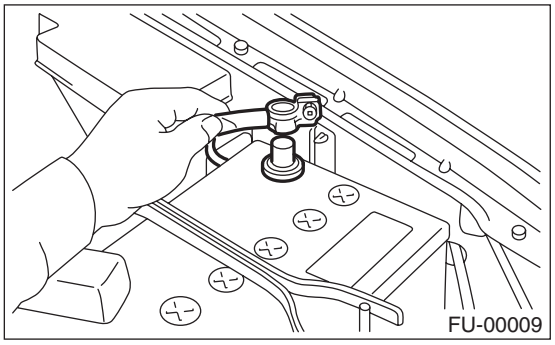

3) Lift up the vehicle.
4) Remove the center exhaust pipe. <Ref. to EX(H4DOTC)-10, REMOVAL, Center Exhaust Pipe.>
5) Lower the vehicle.
6) Separate the turbocharger joint pipe from turbocharger.

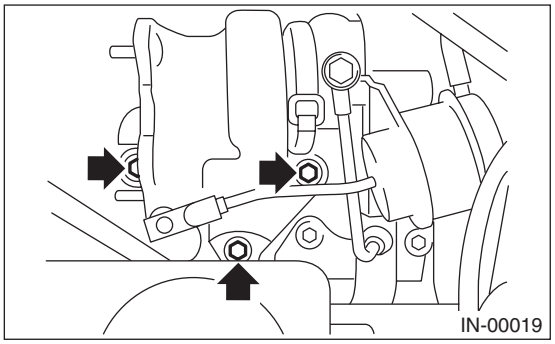

7) Disconnect the engine coolant hose which is connected to coolant filler tank.

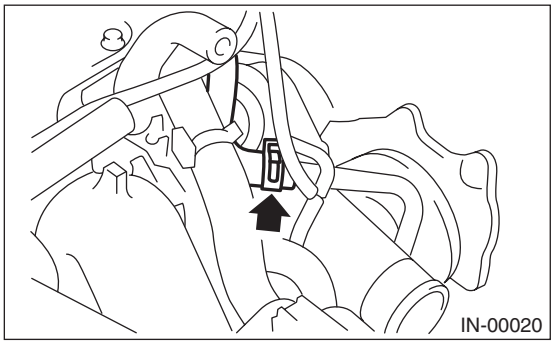

8) Loosen the clamp which secures turbocharger to intake duct.

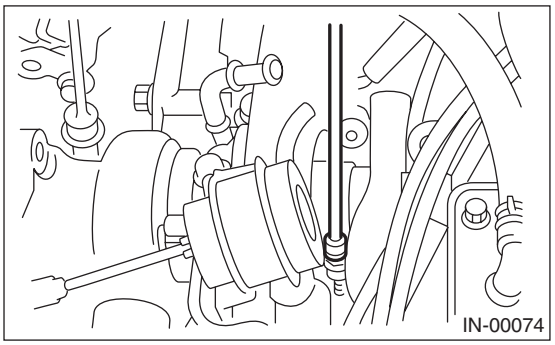

9) Loosen the flare joint of the oil inlet pipe, and disconnect the flare joint.
10) Remove the oil inlet pipe from turbocharger.

CAUTION:
In order to prevent damaging the oil pipe on the cylinder head side, fix the section (a) shown in the figure when loosing the oil inlet pipe flare nut, and avoid the part from rotating together while loosening the nut.

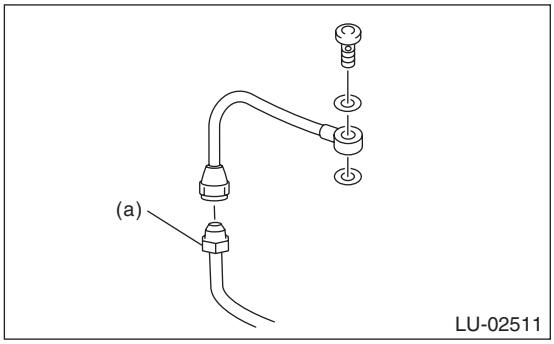

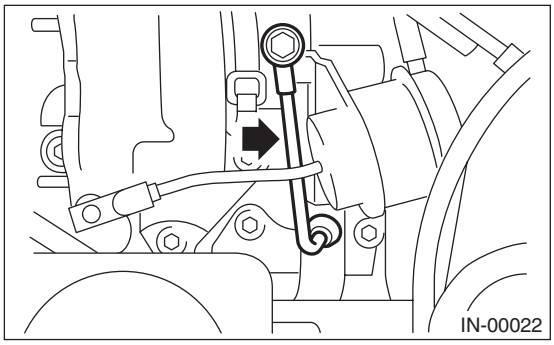

11) Disconnect the engine coolant hose from the pipe, and remove the turbocharger bracket RH.

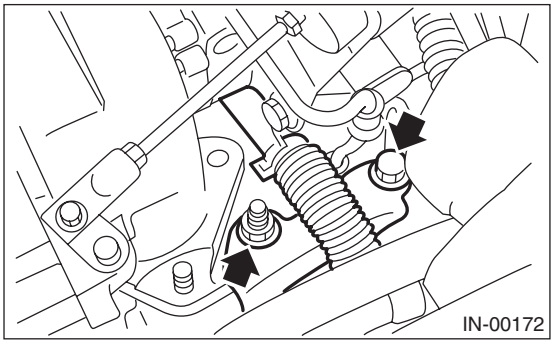

12) Disconnect the oil outlet hose from pipe.

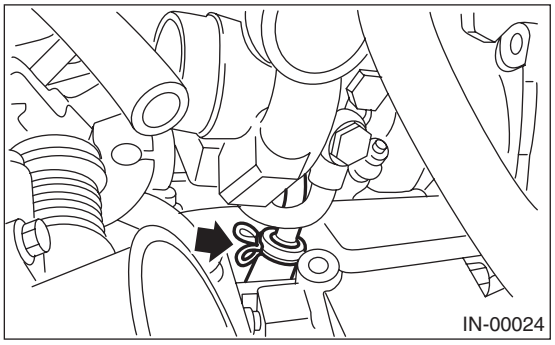

13) Take out the turbocharger from engine compartment.

B: INSTALLATION

CAUTION:
When replacing the turbocharger, check the filter part of union screw for clogging. <Ref. to LU(H4DOTC)-24, INSPECTING UNION SCREW WITH FILTER, INSPECTION, Oil Pipe.>

1. EXCEPT FOR STI MODEL

1) Connect the oil outlet hose to outlet pipe.

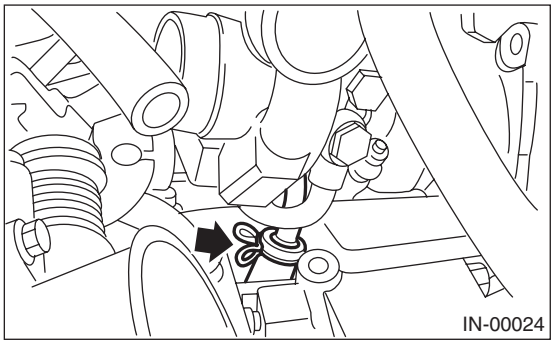

2) Install the turbocharger to intake duct.

Tightening torque:
3 N·m (0.3 kgf-m, 2.2 ft-lb)

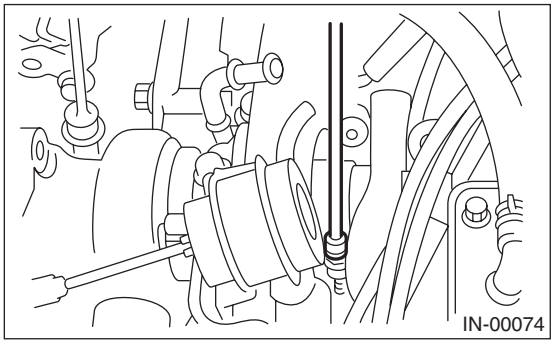

3) Install the oil inlet pipe to turbocharger.

NOTE:
Use a new gasket.

Tightening torque:
T1: 16 N·m (1.6 kgf-m, 11.6 ft-lb)
T2: 29 N·m (3.0 kgf-m, 21.7 ft-lb)
T3: 4.9 N·m (0.50 kgf-m, 3.6 ft-lb)

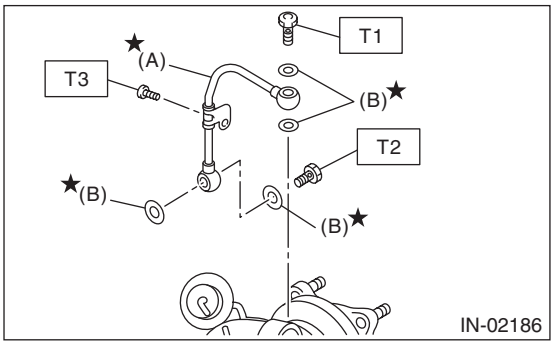

(A) Oil inlet pipe
(B) Metal gasket

4) Install the turbocharger bracket RH, and connect the engine coolant hose to the pipe.

Tightening torque:
33 N·m (3.4 kgf-m, 24.6 ft-lb)

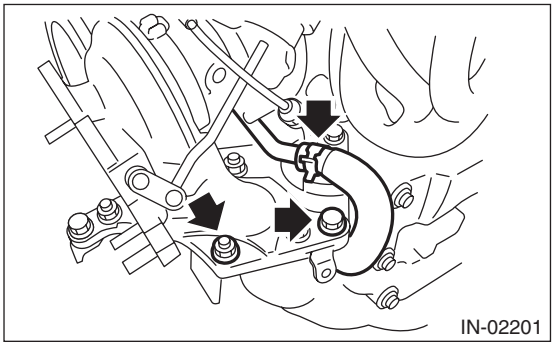

5) Install the joint pipe to turbocharger.

NOTE:
Use a new gasket.

Tightening torque:
35 N·m (3.6 kgf-m, 25.8 ft-lb)

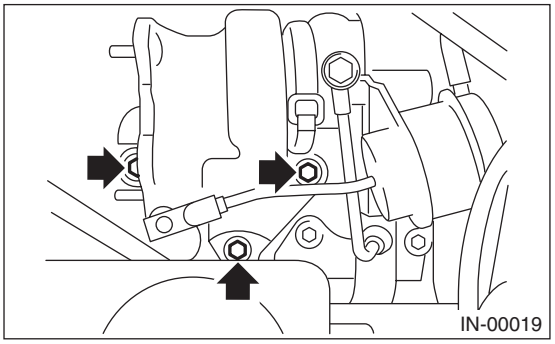

6) Connect the engine coolant hose which is connected to the coolant filler tank.

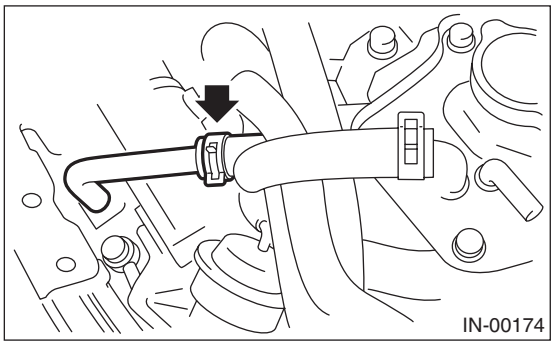

7) Lift up the vehicle.
8) Install the center exhaust pipe. <Ref. to EX(H4DOTC)-11, INSTALLATION, Center Exhaust Pipe.>
9) Connect the ground cable to the battery.

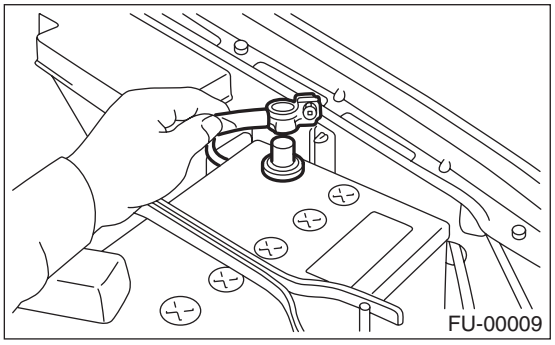

2. STI MODEL

1) Connect the oil outlet hose to outlet pipe.

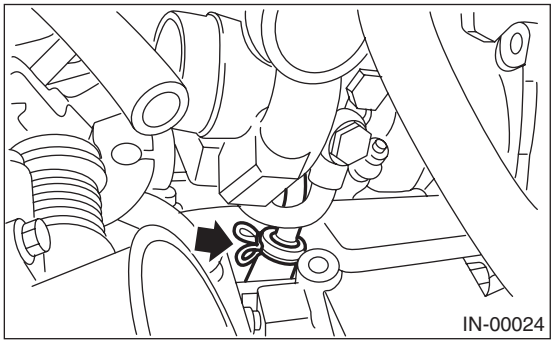

2) Install the turbocharger to intake duct.

Tightening torque:
3 N·m (0.3 kgf-m, 2.2 ft-lb)

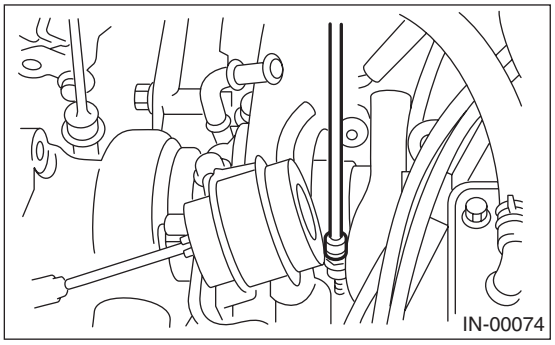

3) Inall the oil inlet pipe to turbocharger, and connect the flare joint.

CAUTION:
In order to prevent damaging the oil pipe on the cylinder head side, fix the section (a) shown in the figure when tightening the oil inlet pipe flare nut, and avoid the part from rotating together while tightening the nut.

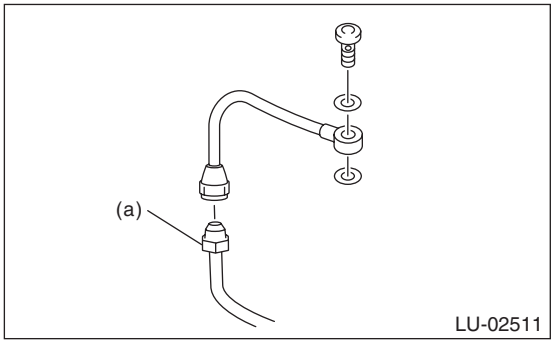

NOTE:
Use a new gasket.
Tightening torque:
Union bolt
16 N·m (1.6 kgf-m, 11.8 ft-lb)
Flare joint
20 N·m (2.0 kgf-m, 14.8 ft-lb)

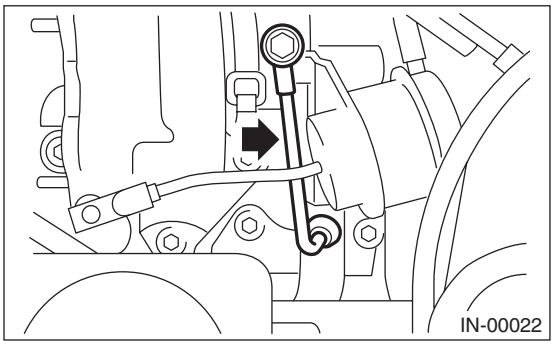

4) Install the turbocharger bracket RH, and connect the engine coolant hose to the pipe.

Tightening torque:
33 N·m (3.4 kgf-m, 24.6 ft-lb)

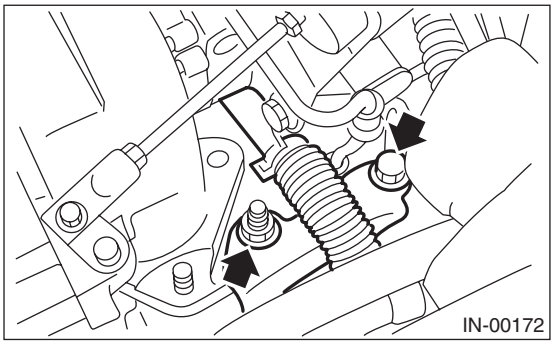

5) Attach the turbocharger joint pipe to turbocharger.

NOTE:
Use a new gasket.

Tightening torque:
35 N·m (3.6 kgf-m, 25.8 ft-lb)

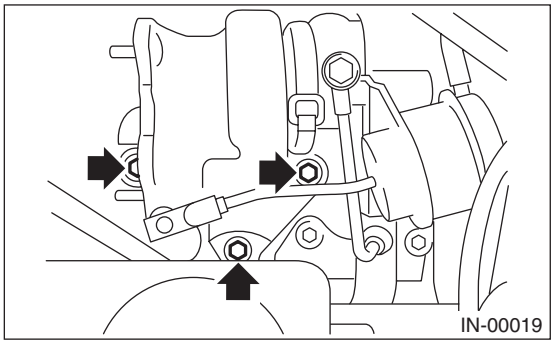

6) Connect the engine coolant hose which is connected to the coolant filler tank.

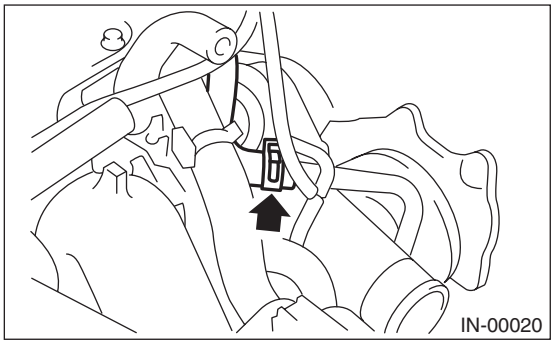
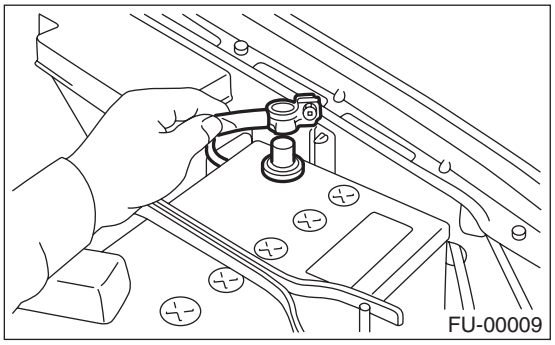
7) Lift up the vehicle.
8) Install the center exhaust pipe. <Ref. to EX(H4DOTC)-11, INSTALLATION, Center Exhaust Pipe.>
9) Lower the vehicle.
10) Connect the ground cable to the battery.